Check Valves- Welded Bonnet- Full Port

BONNEY FORGE

2500 Ltd.
4500 Ltd.

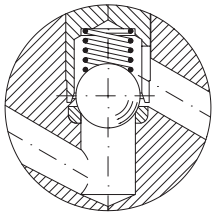

Design construction:
ASME B16.34 Limited Class
Testing according to API 598
Marking MSS SP25
Spring on request only
Body bonnet weld to ASME IX
Socket Weld Ends to ASME B16.11
Screwed Ends (NPT) to ASME B1.20.1
Butt Welding Ends to ASME B16.25
Ratings:
- carbon steel class 2500 6250 psig @ 100°F
431 bar + 38°C
- carbon steel class 4500 11250 psig @ 100°F
776 bar + 38°C

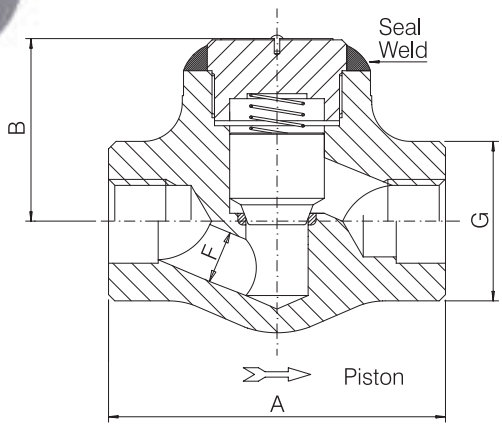

2500 LTD. — FULL PORT – FIG. 25W 40 - 25W 50

SIZE	inch / mm	1/4 / 6	3/8 / 10	1/2 / 15	3/4 / 20	1 / 25	1 1/2 / 40	2 / 50
A	inch	4.33	4.33	5	5.91	7.09	8.27	9.06
	mm	110	110	127	150	180	210	230
B	inch	2.76	2.76	3.39	3.62	4.33	5.91	7.09
	mm	70	70	86	92	110	150	180
F	inch	.28	.35	.43	.57	.75	1.10	1.38
	mm	7	9	11	14,5	19	28	35
G	inch	1.89	1.89	2.20	2.52	3.07	3.35	3.74
	mm	48	48	56	64	78	85	95
Weight	lb.	7	7	8.25	12.25	22	35.25	46.25
	kg	3,2	3,2	3,8	5,6	10	16	21

4500 LTD. — FULL PORT – FIG. 45W 40 - 45W 50

SIZE	inch / mm	1/4 / 6	3/8 / 10	1/2 / 15	3/4 / 20	1 / 25	1 1/2 / 40	2 / 50
A	inch	5	5	5	7.09	7.09	9.06	9.06
	mm	127	127	127	180	180	230	230
B	inch	3.54	3.54	3.54	4.33	4.33	7.09	7.68
	mm	90	90	90	110	110	180	195
F	inch	.28	.28	.31	.43	.55	.98	1.26
	mm	7	7	8	11	14	25	32
G	inch	2.20	2.20	2.20	3.07	3.07	3.74	4.72
	mm	56	56	56	78	78	95	120
Weight	lb.	8.5	8.5	8.5	23	23	55.5	59.5
	kg	3,9	3,9	3,9	10,5	10,5	25,2	27

Available with Socket Weld or Butt-Weld Ends only.
Materials and trim specifications Page 91